MSM II MO SPDT solder Pins

Metal push-button with switching voltage up to 250 VAC and indicator elements with different illumination surfaces

Push button
Ring illumination
red

See below:
Approvals and Compliances

Description

- Mechanical switch with stroke MO (Momentary)
- With or without illumination
- Small installation depth
- With torsion protection for easier positioning
- Solder terminal
- Indicator elements in identical design as push buttons

Unique Selling Proposition

- Attractive tactile feedback
- High quality materials
- Long life span
- Color marking and variety of design options regarding size, color and illumination

Characteristics

- Housing material in stainless steel
- Actuator in stainless steel or ceramic
- Housing and actuator material of the ring-illuminated RD version in black anodized aluminum
- Switching voltage from 30 VDC to 125 VAC
- Switching current from 0.1 A to 3 A, with gold 100mA
- All laser marked, ring-illuminated and point-illuminated versions have anti-rotation protection for easy mounting

References

Other versions on request

Weblinks

pdf data sheet, html datasheet, General Product Information, CAD-Drawings, Product News, Detailed request for product, Configuartor

Technical Data

Electrical Data	
Switching Function	See table of Subminiature and Micro-switch
Supply Voltage LED	5 VDC - 24 VDC, see table of variants
Impulse Withstand Voltage (ESD)	8 kV contact discharge
	15 kV air discharge
Mechanical Data	
Actuating Force	4.5 N
Actuating Travel	1.0 mm
Lifetime	1.5 million actuations
Shock Protection	IK08 / IK07 (M30)
Mounting screw torque Plastic Nut	max. 3.5 Nm

Climatical Data	
Operating Temperature	-40 to 85 °C
Storage Temperature	-40 to 85 °C
Protection Class	IP66 and IP67 Front Side
Salt Spray Test (acc. to IEC 60068-2-11)	24 h / 48 h / 96 h Residence Time
Material	
Housing	Aluminium / Stainless Steel
Actuator	Aluminium / Stainless Steel / Ceramics
Seal Ring	NBR70
Plastic Nut	PA, UL94

Approvals and Compliances

Detailed information on product approvals, code requirements, usage instructions and detailed test conditions can be looked up in Details about Approvals

SCHURTER products are designed for use in industrial environments. They have approvals from independent testing bodies according to national and international standards. Products with specific characteristics and requirements such as required in the automotive sector according to IATF 16949, medical technology according to ISO 13485 or in the aerospace industry can be offered exclusively with customer-specific, individual agreements by SCHURTER.

Compliances

The product complies with following Guide Lines

Identification	Details	Initiator	Description
CE	CE declaration of conformity	SCHURTER AG	The CE marking declares that the product complies with the applicable requirements laid down in the harmonisation of Community legislation on its affixing in accordance with EU Regulation 765/2008.
UK CA	UKCA declaration of conformity	SCHURTER AG	The UKCA marking declares that the product complies with the applicable requirements laid down in the British Amendment of Regulation (EC) 765/2008.
RoHS	RoHS	SCHURTER AG	Directive RoHS 2011/65/EU, Amendment (EU) 2015/863
REACH	REACH	SCHURTER AG	On 1 June 2007, Regulation (EC) No 1907/2006 on the Registration, Evaluation, Authorization and Restriction of Chemicals 1 (abbreviated as "REACH") entered into force.

Dimension [mm]

Non illuminated push buttons

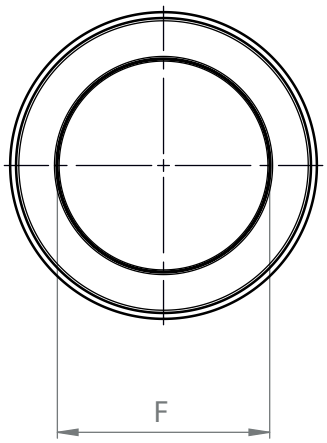

Non illuminated

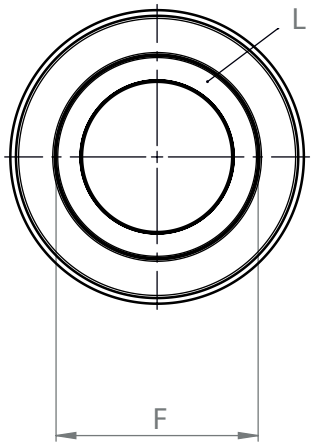

Non illuminated
with color ring (RC)

MSM II MO SPDT solder Pins

MSM II SPDT with Subminiature Microswitch and Solder Terminal

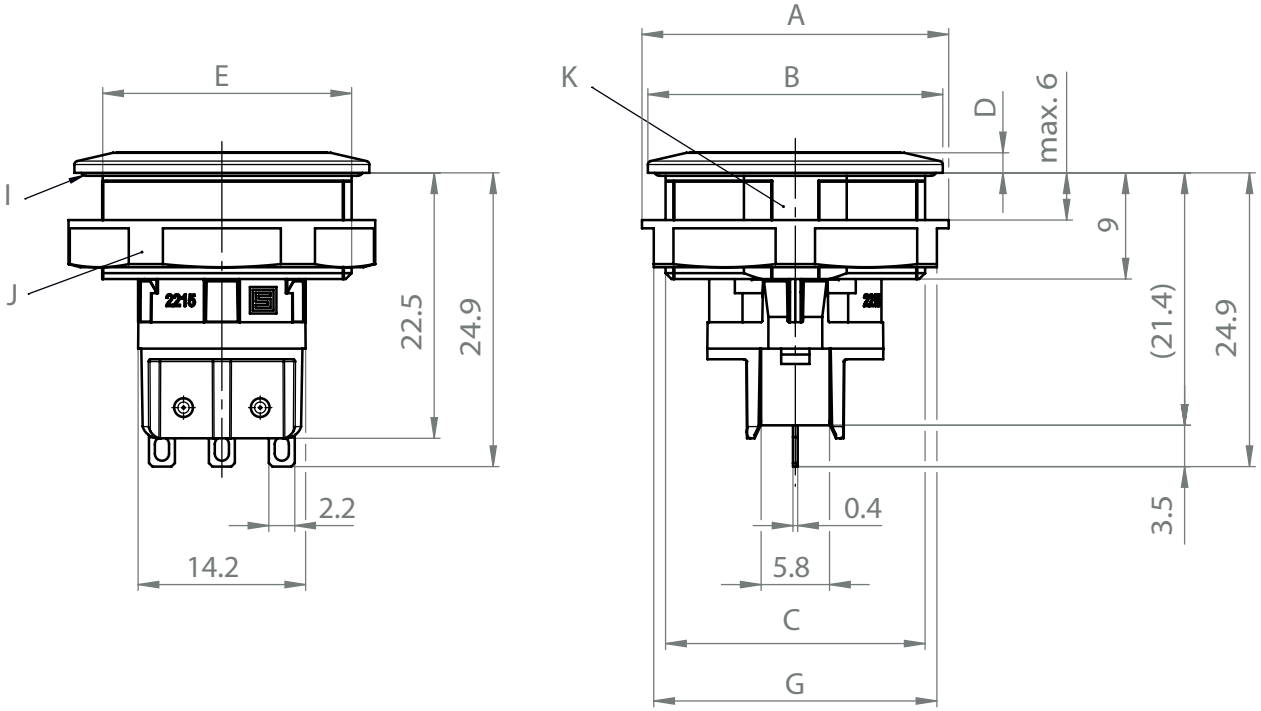

Illuminated push buttons

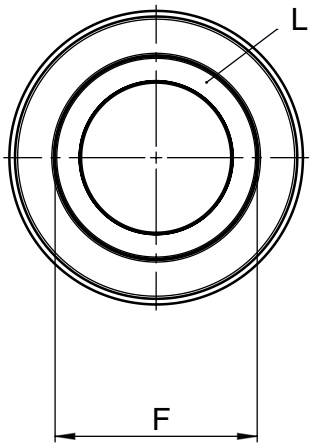

Ring illumination(RI)

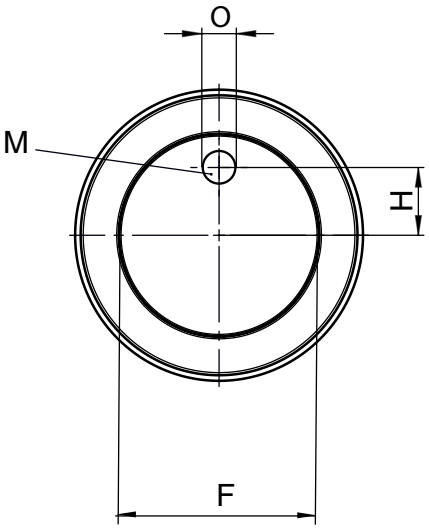

Point illumination(PI)

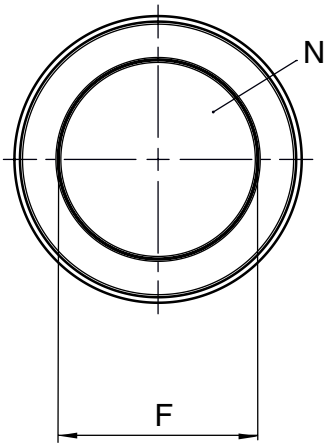

Area illumination (AI)

MSM II PI/RI SPDT with Subminiature Microswitch and Solder Terminal

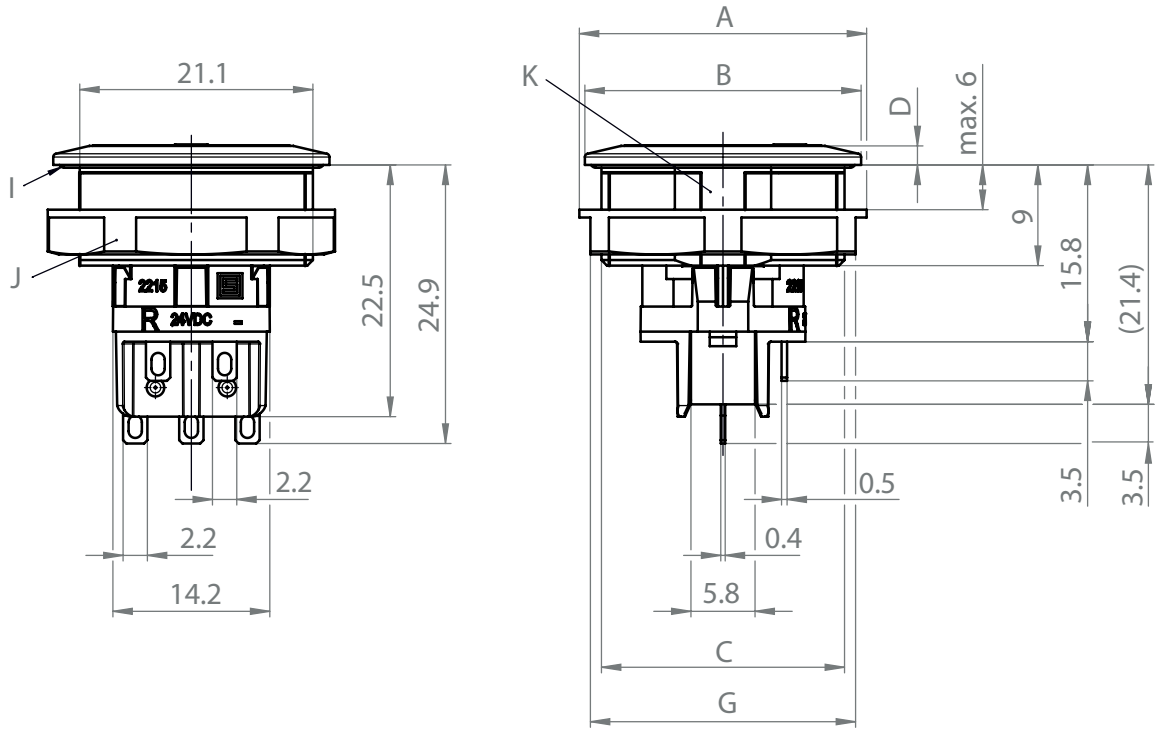

Diameter in mm	16	19	22	30
A	Ø20	Ø24	Ø26	Ø34.5
B	Ø19	Ø22	Ø25	Ø34
C	M16x1	M19x0.75	M22x1	M30x1.5
D	1.7	1.7	1.7	2
E	15.1	18.1	21.1	28.8
F Operating area / illumination area	Ø12.8	Ø15.8	Ø18	Ø25
G	AF19	AF22	AF24	AF32
H	4.3	5.3	6.1	8.4
O	2.2	2.7	3.1	4.3
I	O-Ring			
J	Nut			
K	Anti-rotation lock			
L	Lighting ring			
M	Point illumination			
N	Area illumination			

Dimension

All illuminated products and all non illuminated push buttons with symbols are supplied with anti-rotation protection

Non-illuminated push-buttons are supplied without anti-rotation protection

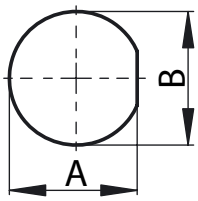

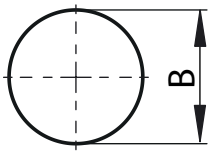

Diameter (mm)	A	B
16	15.15+0.05	16.1 +0.1
19	18.15+0.05	19.1 +0.1
22	21.15+0.05	22.1 +0.1
24	23.50+0.05	24.1 +0.1
30	28.85+0.05	30.1 +0.1

Diagrams

Switching element SPDT

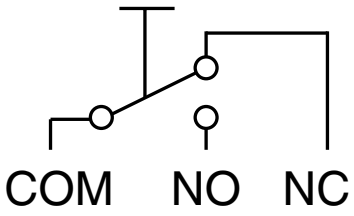

Illumination single color
Terminal assignment without series resistor

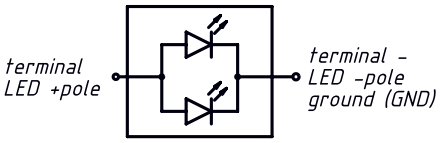

Illumination RGB
Terminal assignment without series resistor

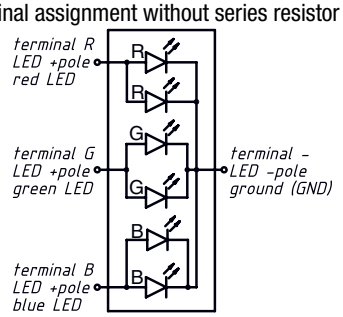

Illumination single color
Terminal assignment with resistors for 5 VDC

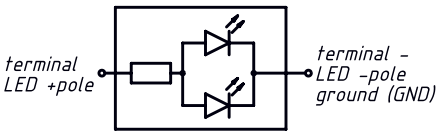

Illumination RGB
Terminal assignment with resistors for RGB 5 VDC

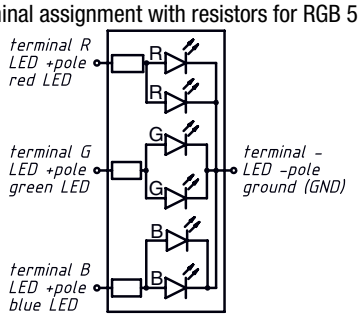

common anode
Terminal assignment without resistors for RGB

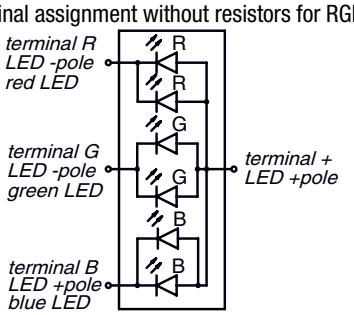

Illumination single color
Terminal assignment with resistors for 12 VDC and 24 VDC

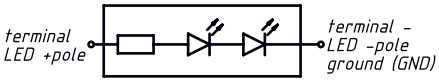

Illumination RGB
Terminal assignment with resistors for RGB 12 VDC and 24 VDC

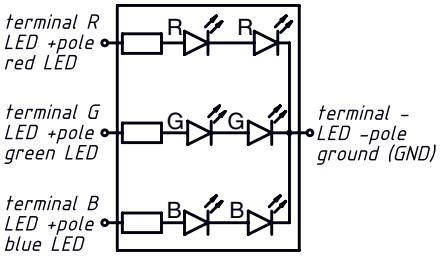

Illumination options for RGB

Lighting type	Wire red	Wire green	Wire blue	Resulting Color
Multicolor Singlecolor	x			Red
Multicolor Singlecolor		x		Green
Multicolor Singlecolor			x	Blue
Multicolor RGB Additive 2	x	x		Yellow
Multicolor RGB Additive 2	x		x	Magenta
Multicolor RGB Additive 2		x	x	Cyan
Multicolor RGB Additive 3	x	x	x	White

Illumination

Operating Data	Forward Current max.	Forward Voltage at 10 mA	Forward Voltage max.
LED red	25 mA	1,7 VDC	2,4 VDC
LED green	25 mA	2,6 VDC	3,2 VDC
LED blue	25 mA	2,6 VDC	3,2 VDC

Subminiature Microswitch

Subminiature Microswitch	Contact Material	Switching Voltage	Switching current	Rated Switching Capacity	Lifetime	Contact Resistance	Insulation Resistance	Duration of Bounce
0.1 A, IP40	Au	max. 30 VDC	max. 0.1 A	3 W	0.1 Mio.	< 100 mΩ	> 100 MΩ	< 10 ms
3 A , IP40	Ag	max. 125 VAC	max. 3 A	375 W	0.03 Mio.	< 30 mΩ	> 100 MΩ	< 10 ms

Soldering

· Terminal connection

When soldering, make sure that the temperature of the soldering iron tip is not higher than 300°C, and complete the soldering within 3 seconds. Do not apply any external force for 1 minute after soldering. Soldering at an excessively high temperature or soldering for more than 3 seconds may deteriorate the characteristics of the Switch.

· Connecting to PCB terminal Boards

When using automatic soldering baths, we recommend soldering at 260°C ±5°C within 5 seconds. Make sure that the liquid surface of the solder does not flow over the edge of the board. When soldering terminals manually, perform soldering within 3 seconds at iron tip temperature not higher than 350°C. Do not apply any external force for at least 1 minute after soldering. When applying solder, keep the solder away from the case of the Switch and do not allow solder or flux to flow into the case.

Order number key

M	S	M	II	-	19	-	MO	NX	A10	-	B	1	-	B	A0	-	A	-	PI	0GN	012	C	A0	-	S0	NC	B	-	S0	NC	NF	-	1	074	-	C
					1		*		2										3	4	5	6	*		*		*		7				8			*

Diameter		1
16 mm	=	16
19 mm	=	19
22 mm	=	22
30 mm 2)	=	30

Switch function		*
Switch	=	MONX

Switching current		2
Switch with Subminiature SPDT / solder terminal		
100 mA Gold contact	=	A10-B2-AE0-A
3 A	=	03A-B2-BE0-A

Illumination / Appearance		3
No illumination	=	00
No illumination with colored ring	=	RC
Area illumination	=	AI
Ring illumination	=	RI
Point illumination	=	PI
Ring illumination Discreet/DeadFront	=	RD

Illumination / Color		4
None	=	000
Red	=	0RD
Green	=	0GN
Blue	=	0BL
Yellow	=	0YL
White	=	0WT
Multicolor	=	RGB

Supply voltage illumination		5
No illumination	=	000
5 V	=	005
12 V	=	012
24 V	=	024
LED without resistor	=	00R

2) 30 mm diameter not available with Area Illumination

Circuit type illumination		6
None	=	0
Common Cathode	=	C
Common Anode	=	A

Housing material and color			*
Stainless steel 1.4305	(Silver)	=	S0NC
Aluminum EN AW-6082 (3.3215)	(Black)	=	A0BK

Actuator material			7
Stainless steel 1.4305	(Silver)	=	S0NC
Ceramic (only with stainless steel)	(White)	=	C0WT
Aluminum (only on RD version)	(Black)	=	A0BK

Marking type		8
None	=	0000
Laser marking		
STOP	=	1057
ON	=	1065
OFF	=	1066
ON/OFF	=	1071
START	=	1072
⏻	=	1074
💡	=	1075
🔔	=	1076
ⓘ	=	1077

further lettering on request

Accessories		*
Hex nut plastic with O-ring	=	C

Stainless steel nut can be ordered additionally

0098.9260	Stainless steel nut M16
0098.9250	Stainless steel nut M19
0098.9253	Stainless steel nut M22
0098.9216	Stainless steel nut M30

* Values marked with an asterisk depend on the selected properties.

Variants

Diameter	Switching current	Electrical contact	Circuit type illumination	IP specification backside	Illumination	Illumination color	Supply Voltage LED	Order Number
16mm	100mA	SPDT	none	IP40	none	none	none	3-146-878
16mm	3A	SPDT	none	IP40	none	none	none	3-146-879
16mm	100mA	SPDT	none	IP40	none	none	none	3-146-880
16mm	3A	SPDT	none	IP40	none	none	none	3-146-881
16mm	100mA	SPDT	none	IP40	ring colored (non illumination)	red	none	3-146-883
16mm	100mA	SPDT	none	IP40	ring colored (non illumination)	green	none	3-146-884
16mm	100mA	SPDT	none	IP40	ring colored (non illumination)	blue	none	3-146-885
16mm	100mA	SPDT	none	IP40	ring colored (non illumination)	black	none	3-146-886
16mm	100mA	SPDT	none	IP40	ring colored (non illumination)	grey	none	3-146-887
16mm	100mA	SPDT	none	IP40	ring colored (non illumination)	yellow	none	3-146-888
16mm	100mA	SPDT	none	IP40	ring colored (non illumination)	white	none	3-146-889
16mm	100mA	SPDT	none	IP40	ring colored (non illumination)	orange	none	3-146-890
16mm	3A	SPDT	none	IP40	ring colored (non illumination)	red	none	3-146-891
16mm	3A	SPDT	none	IP40	ring colored (non illumination)	green	none	3-146-892
16mm	3A	SPDT	none	IP40	ring colored (non illumination)	blue	none	3-146-893
16mm	3A	SPDT	none	IP40	ring colored (non illumination)	black	none	3-146-894
16mm	3A	SPDT	none	IP40	ring colored (non illumination)	grey	none	3-146-895
16mm	3A	SPDT	none	IP40	ring colored (non illumination)	yellow	none	3-146-896
16mm	3A	SPDT	none	IP40	ring colored (non illumination)	white	none	3-146-897
16mm	3A	SPDT	none	IP40	ring colored (non illumination)	orange	none	3-146-898
16mm	100mA	SPDT	none	IP40	ring illumination	red	24V DC	3-146-899
16mm	3A	SPDT	none	IP40	ring illumination	red	24V DC	3-146-900
16mm	100mA	SPDT	none	IP40	ring illumination	green	24V DC	3-146-905
16mm	3A	SPDT	none	IP40	ring illumination	green	24V DC	3-146-906
16mm	100mA	SPDT	none	IP40	ring illumination	blue	24V DC	3-146-907
16mm	3A	SPDT	none	IP40	ring illumination	blue	24V DC	3-146-908
16mm	100mA	SPDT	none	IP40	ring illumination	yellow	24V DC	3-146-909
16mm	3A	SPDT	none	IP40	ring illumination	yellow	24V DC	3-146-910
16mm	100mA	SPDT	none	IP40	ring illumination	white	24V DC	3-146-911
16mm	3A	SPDT	none	IP40	ring illumination	white	24V DC	3-146-912
16mm	100mA	SPDT	common cathode	IP40	ring illumination	multicolor	24V DC	3-146-913
16mm	3A	SPDT	common cathode	IP40	ring illumination	multicolor	24V DC	3-146-914
16mm	100mA	SPDT	none	IP40	ring illumination	red	12V DC	3-146-919
16mm	3A	SPDT	none	IP40	ring illumination	red	12V DC	3-146-920
16mm	100mA	SPDT	none	IP40	ring illumination	green	12V DC	3-146-921
16mm	3A	SPDT	none	IP40	ring illumination	green	12V DC	3-146-932
16mm	100mA	SPDT	none	IP40	ring illumination	blue	12V DC	3-146-933
16mm	3A	SPDT	none	IP40	ring illumination	blue	12V DC	3-146-934
16mm	100mA	SPDT	none	IP40	ring illumination	yellow	12V DC	3-146-936

MSM II MO SPDT solder Pins

Diameter	Switching current	Electrical contact	Circuit type illumination	IP specification backside	Illumination	Illumination color	Supply Voltage LED	Order Number
16mm	3A	SPDT	none	IP40	ring illumination	yellow	12V DC	3-146-937
16mm	100mA	SPDT	none	IP40	ring illumination	white	12V DC	3-146-938
16mm	3A	SPDT	none	IP40	ring illumination	white	12V DC	3-146-939
16mm	100mA	SPDT	common cathode	IP40	ring illumination	multicolor	12V DC	3-146-940
16mm	3A	SPDT	common cathode	IP40	ring illumination	multicolor	12V DC	3-146-941
16mm	100mA	SPDT	none	IP40	ring illumination	red	5V DC	3-146-942
16mm	3A	SPDT	none	IP40	ring illumination	red	5V DC	3-146-943
16mm	100mA	SPDT	none	IP40	ring illumination	green	5V DC	3-146-944
16mm	3A	SPDT	none	IP40	ring illumination	green	5V DC	3-146-945
16mm	100mA	SPDT	none	IP40	ring illumination	blue	5V DC	3-146-946
16mm	3A	SPDT	none	IP40	ring illumination	blue	5V DC	3-146-947
16mm	100mA	SPDT	none	IP40	ring illumination	yellow	5V DC	3-146-948
16mm	3A	SPDT	none	IP40	ring illumination	yellow	5V DC	3-146-949
16mm	100mA	SPDT	none	IP40	ring illumination	white	5V DC	3-146-950
16mm	3A	SPDT	none	IP40	ring illumination	white	5V DC	3-146-951
16mm	100mA	SPDT	common cathode	IP40	ring illumination	multicolor	5V DC	3-146-952
16mm	3A	SPDT	common cathode	IP40	ring illumination	multicolor	5V DC	3-146-953
16mm	100mA	SPDT	none	IP40	point illumination	red	24V DC	3-147-350
16mm	3A	SPDT	none	IP40	point illumination	red	24V DC	3-147-351
16mm	100mA	SPDT	none	IP40	point illumination	green	24V DC	3-147-352
16mm	3A	SPDT	none	IP40	point illumination	green	24V DC	3-147-353
16mm	100mA	SPDT	none	IP40	point illumination	blue	24V DC	3-147-354
16mm	3A	SPDT	none	IP40	point illumination	blue	24V DC	3-147-355
16mm	100mA	SPDT	none	IP40	point illumination	yellow	24V DC	3-147-357
16mm	3A	SPDT	none	IP40	point illumination	yellow	24V DC	3-147-358
16mm	100mA	SPDT	none	IP40	point illumination	white	24V DC	3-147-359
16mm	3A	SPDT	none	IP40	point illumination	white	24V DC	3-147-360
16mm	100mA	SPDT	common cathode	IP40	point illumination	multicolor	24V DC	3-147-361
16mm	3A	SPDT	common cathode	IP40	point illumination	multicolor	24V DC	3-147-362
16mm	100mA	SPDT	none	IP40	area illumination	red	24V DC	3-147-364
16mm	3A	SPDT	none	IP40	area illumination	red	24V DC	3-147-365
16mm	100mA	SPDT	none	IP40	area illumination	green	24V DC	3-147-366
16mm	3A	SPDT	none	IP40	area illumination	green	24V DC	3-147-367
16mm	100mA	SPDT	none	IP40	area illumination	blue	24V DC	3-147-368
16mm	3A	SPDT	none	IP40	area illumination	blue	24V DC	3-147-369
16mm	100mA	SPDT	none	IP40	area illumination	yellow	24V DC	3-147-370
16mm	3A	SPDT	none	IP40	area illumination	yellow	24V DC	3-147-371
16mm	100mA	SPDT	none	IP40	area illumination	white	24V DC	3-147-372
16mm	3A	SPDT	none	IP40	area illumination	white	24V DC	3-147-373
16mm	100mA	SPDT	common cathode	IP40	area illumination	multicolor	24V DC	3-147-374
16mm	3A	SPDT	common cathode	IP40	area illumination	multicolor	24V DC	3-147-375
16mm	100mA	SPDT	none	IP40	point illumination	red	12V DC	3-147-376
16mm	3A	SPDT	none	IP40	point illumination	red	12V DC	3-147-377
16mm	100mA	SPDT	none	IP40	point illumination	green	12V DC	3-147-378
16mm	3A	SPDT	none	IP40	point illumination	green	12V DC	3-147-379
16mm	100mA	SPDT	none	IP40	point illumination	blue	12V DC	3-147-380
16mm	3A	SPDT	none	IP40	point illumination	blue	12V DC	3-147-381

Diameter	Switching current	Electrical contact	Circuit type illumination	IP specification backside	Illumination	Illumination color	Supply Voltage LED	Order Number
16mm	100mA	SPDT	none	IP40	point illumination	yellow	12V DC	3-147-382
16mm	3A	SPDT	none	IP40	point illumination	yellow	12V DC	3-147-383
16mm	100mA	SPDT	none	IP40	point illumination	white	12V DC	3-147-384
16mm	3A	SPDT	none	IP40	point illumination	white	12V DC	3-147-385
16mm	100mA	SPDT	common cathode	IP40	point illumination	multicolor	12V DC	3-147-386
16mm	3A	SPDT	common cathode	IP40	point illumination	multicolor	12V DC	3-147-387
16mm	100mA	SPDT	none	IP40	area illumination	red	12V DC	3-147-388
16mm	3A	SPDT	none	IP40	area illumination	red	12V DC	3-147-389
16mm	100mA	SPDT	none	IP40	area illumination	green	12V DC	3-147-390
16mm	3A	SPDT	none	IP40	area illumination	green	12V DC	3-147-391
16mm	100mA	SPDT	none	IP40	area illumination	blue	12V DC	3-147-392
16mm	3A	SPDT	none	IP40	area illumination	blue	12V DC	3-147-393
16mm	100mA	SPDT	none	IP40	area illumination	yellow	12V DC	3-147-394
16mm	3A	SPDT	none	IP40	area illumination	yellow	12V DC	3-147-395
16mm	100mA	SPDT	none	IP40	area illumination	white	12V DC	3-147-396
16mm	3A	SPDT	none	IP40	area illumination	white	12V DC	3-147-397
16mm	100mA	SPDT	common cathode	IP40	area illumination	multicolor	12V DC	3-147-398
16mm	3A	SPDT	common cathode	IP40	area illumination	multicolor	12V DC	3-147-399
16mm	100mA	SPDT	none	IP40	point illumination	red	5V DC	3-147-400
16mm	3A	SPDT	none	IP40	point illumination	red	5V DC	3-147-401
16mm	100mA	SPDT	none	IP40	point illumination	green	5V DC	3-147-402
16mm	3A	SPDT	none	IP40	point illumination	green	5V DC	3-147-403
16mm	100mA	SPDT	none	IP40	point illumination	blue	5V DC	3-147-404
16mm	3A	SPDT	none	IP40	point illumination	blue	5V DC	3-147-405
16mm	100mA	SPDT	none	IP40	point illumination	yellow	5V DC	3-147-406
16mm	3A	SPDT	none	IP40	point illumination	yellow	5V DC	3-147-407
16mm	100mA	SPDT	none	IP40	point illumination	white	5V DC	3-147-408
16mm	3A	SPDT	none	IP40	point illumination	white	5V DC	3-147-409
16mm	100mA	SPDT	common cathode	IP40	point illumination	multicolor	5V DC	3-147-410
16mm	3A	SPDT	common cathode	IP40	point illumination	multicolor	5V DC	3-147-411
16mm	100mA	SPDT	none	IP40	area illumination	red	5V DC	3-147-412
16mm	3A	SPDT	none	IP40	area illumination	red	5V DC	3-147-413
16mm	100mA	SPDT	none	IP40	area illumination	green	5V DC	3-147-414
16mm	3A	SPDT	none	IP40	area illumination	green	5V DC	3-147-415
16mm	100mA	SPDT	none	IP40	area illumination	blue	5V DC	3-147-416
16mm	3A	SPDT	none	IP40	area illumination	blue	5V DC	3-147-417
16mm	100mA	SPDT	none	IP40	area illumination	yellow	5V DC	3-147-418
16mm	3A	SPDT	none	IP40	area illumination	yellow	5V DC	3-147-419
16mm	100mA	SPDT	none	IP40	area illumination	white	5V DC	3-147-420
16mm	3A	SPDT	none	IP40	area illumination	white	5V DC	3-147-421
16mm	100mA	SPDT	common cathode	IP40	area illumination	multicolor	5V DC	3-147-422
16mm	3A	SPDT	common cathode	IP40	area illumination	multicolor	5V DC	3-147-423
16mm	100mA	SPDT	common cathode	IP40	ring illumination	multicolor	w/o resistors	3-158-629
16mm	100mA	SPDT	none	IP40	none	none	none	3-158-742
19mm	100mA	SPDT	none	IP40	none	none	none	3-146-954
19mm	3A	SPDT	none	IP40	none	none	none	3-146-955
19mm	100mA	SPDT	none	IP40	none	none	none	3-146-956

MSM II MO SPDT solder Pins

Diameter	Switching current	Electrical contact	Circuit type illumination	IP specification backside	Illumination	Illumination color	Supply Voltage LED	Order Number
19mm	3A	SPDT	none	IP40	none	none	none	3-146-957
19mm	100mA	SPDT	none	IP40	ring colored (non illumination)	red	none	3-146-958
19mm	3A	SPDT	none	IP40	ring colored (non illumination)	red	none	3-146-959
19mm	100mA	SPDT	none	IP40	ring colored (non illumination)	green	none	3-146-960
19mm	3A	SPDT	none	IP40	ring colored (non illumination)	green	none	3-146-961
19mm	100mA	SPDT	none	IP40	ring colored (non illumination)	blue	none	3-146-962
19mm	3A	SPDT	none	IP40	ring colored (non illumination)	blue	none	3-146-963
19mm	100mA	SPDT	none	IP40	ring colored (non illumination)	black	none	3-146-964
19mm	3A	SPDT	none	IP40	ring colored (non illumination)	black	none	3-146-965
19mm	100mA	SPDT	none	IP40	ring colored (non illumination)	grey	none	3-146-966
19mm	3A	SPDT	none	IP40	ring colored (non illumination)	grey	none	3-146-967
19mm	100mA	SPDT	none	IP40	ring colored (non illumination)	yellow	none	3-146-968
19mm	3A	SPDT	none	IP40	ring colored (non illumination)	yellow	none	3-146-969
19mm	100mA	SPDT	none	IP40	ring colored (non illumination)	white	none	3-146-970
19mm	3A	SPDT	none	IP40	ring colored (non illumination)	white	none	3-146-971
19mm	100mA	SPDT	none	IP40	ring colored (non illumination)	orange	none	3-146-972
19mm	3A	SPDT	none	IP40	ring colored (non illumination)	orange	none	3-146-973
19mm	100mA	SPDT	none	IP40	ring illumination	red	24V DC	3-146-974
19mm	3A	SPDT	none	IP40	ring illumination	red	24V DC	3-146-975
19mm	100mA	SPDT	none	IP40	ring illumination	green	24V DC	3-146-976
19mm	3A	SPDT	none	IP40	ring illumination	green	24V DC	3-146-978
19mm	100mA	SPDT	none	IP40	ring illumination	blue	24V DC	3-146-979
19mm	3A	SPDT	none	IP40	ring illumination	blue	24V DC	3-146-980
19mm	100mA	SPDT	none	IP40	ring illumination	yellow	24V DC	3-146-981
19mm	3A	SPDT	none	IP40	ring illumination	yellow	24V DC	3-146-982
19mm	100mA	SPDT	none	IP40	ring illumination	white	24V DC	3-146-983
19mm	3A	SPDT	none	IP40	ring illumination	white	24V DC	3-146-984
19mm	100mA	SPDT	common cathode	IP40	ring illumination	multicolor	24V DC	3-146-985
19mm	3A	SPDT	common cathode	IP40	ring illumination	multicolor	24V DC	3-146-986
19mm	100mA	SPDT	none	IP40	ring illumination	red	12V DC	3-146-987
19mm	3A	SPDT	none	IP40	ring illumination	red	12V DC	3-146-988
19mm	100mA	SPDT	none	IP40	ring illumination	green	12V DC	3-146-989
19mm	3A	SPDT	none	IP40	ring illumination	green	12V DC	3-146-990
19mm	100mA	SPDT	none	IP40	ring illumination	blue	12V DC	3-146-991
19mm	3A	SPDT	none	IP40	ring illumination	blue	12V DC	3-146-992
19mm	100mA	SPDT	none	IP40	ring illumination	yellow	12V DC	3-146-993
19mm	3A	SPDT	none	IP40	ring illumination	yellow	12V DC	3-146-994
19mm	100mA	SPDT	none	IP40	ring illumination	white	12V DC	3-146-995
19mm	3A	SPDT	none	IP40	ring illumination	white	12V DC	3-146-996
19mm	100mA	SPDT	common cathode	IP40	ring illumination	multicolor	12V DC	3-146-997
19mm	3A	SPDT	common cathode	IP40	ring illumination	multicolor	12V DC	3-146-998

Diameter	Switching current	Electrical contact	Circuit type illumination	IP specification backside	Illumination	Illumination color	Supply Voltage LED	Order Number
19mm	100mA	SPDT	none	IP40	ring illumination	red	5V DC	3-146-999
19mm	3A	SPDT	none	IP40	ring illumination	red	5V DC	3-147-000
19mm	100mA	SPDT	none	IP40	ring illumination	green	5V DC	3-147-001
19mm	3A	SPDT	none	IP40	ring illumination	green	5V DC	3-147-002
19mm	100mA	SPDT	none	IP40	ring illumination	blue	5V DC	3-147-003
19mm	3A	SPDT	none	IP40	ring illumination	blue	5V DC	3-147-004
19mm	100mA	SPDT	none	IP40	ring illumination	yellow	5V DC	3-147-005
19mm	3A	SPDT	none	IP40	ring illumination	yellow	5V DC	3-147-006
19mm	100mA	SPDT	none	IP40	ring illumination	white	5V DC	3-147-007
19mm	3A	SPDT	none	IP40	ring illumination	white	5V DC	3-147-008
19mm	100mA	SPDT	common cathode	IP40	ring illumination	multicolor	5V DC	3-147-009
19mm	3A	SPDT	common cathode	IP40	ring illumination	multicolor	5V DC	3-147-010
19mm	100mA	SPDT	none	IP40	point illumination	red	24V DC	3-147-424
19mm	3A	SPDT	none	IP40	point illumination	red	24V DC	3-147-425
19mm	100mA	SPDT	none	IP40	point illumination	green	24V DC	3-147-426
19mm	3A	SPDT	none	IP40	point illumination	green	24V DC	3-147-427
19mm	100mA	SPDT	none	IP40	point illumination	blue	24V DC	3-147-428
19mm	3A	SPDT	none	IP40	point illumination	blue	24V DC	3-147-429
19mm	100mA	SPDT	none	IP40	point illumination	yellow	24V DC	3-147-430
19mm	3A	SPDT	none	IP40	point illumination	yellow	24V DC	3-147-431
19mm	100mA	SPDT	none	IP40	point illumination	white	24V DC	3-147-432
19mm	3A	SPDT	none	IP40	point illumination	white	24V DC	3-147-433
19mm	100mA	SPDT	common cathode	IP40	point illumination	multicolor	24V DC	3-147-434
19mm	3A	SPDT	common cathode	IP40	point illumination	multicolor	24V DC	3-147-435
19mm	100mA	SPDT	none	IP40	area illumination	red	24V DC	3-147-436
19mm	3A	SPDT	none	IP40	area illumination	red	24V DC	3-147-437
19mm	100mA	SPDT	none	IP40	area illumination	green	24V DC	3-147-438
19mm	3A	SPDT	none	IP40	area illumination	green	24V DC	3-147-439
19mm	100mA	SPDT	none	IP40	area illumination	blue	24V DC	3-147-440
19mm	3A	SPDT	none	IP40	area illumination	blue	24V DC	3-147-441
19mm	100mA	SPDT	none	IP40	area illumination	yellow	24V DC	3-147-442
19mm	3A	SPDT	none	IP40	area illumination	yellow	24V DC	3-147-443
19mm	100mA	SPDT	none	IP40	area illumination	white	24V DC	3-147-444
19mm	3A	SPDT	none	IP40	area illumination	white	24V DC	3-147-445
19mm	100mA	SPDT	common cathode	IP40	area illumination	multicolor	24V DC	3-147-446
19mm	3A	SPDT	common cathode	IP40	area illumination	multicolor	24V DC	3-147-447
19mm	100mA	SPDT	none	IP40	point illumination	red	12V DC	3-147-448
19mm	3A	SPDT	none	IP40	point illumination	red	12V DC	3-147-449
19mm	100mA	SPDT	none	IP40	point illumination	green	12V DC	3-147-450
19mm	3A	SPDT	none	IP40	point illumination	green	12V DC	3-147-451
19mm	100mA	SPDT	none	IP40	point illumination	blue	12V DC	3-147-452
19mm	3A	SPDT	none	IP40	point illumination	blue	12V DC	3-147-453
19mm	100mA	SPDT	none	IP40	point illumination	yellow	12V DC	3-147-454
19mm	3A	SPDT	none	IP40	point illumination	yellow	12V DC	3-147-455
19mm	100mA	SPDT	none	IP40	point illumination	white	12V DC	3-147-456
19mm	3A	SPDT	none	IP40	point illumination	white	12V DC	3-147-457
19mm	100mA	SPDT	common cathode	IP40	point illumination	multicolor	12V DC	3-147-458

MSM II MO SPDT solder Pins

Diameter	Switching current	Electrical contact	Circuit type illumination	IP specification backside	Illumination	Illumination color	Supply Voltage LED	Order Number
19mm	3A	SPDT	common cathode	IP40	point illumination	multicolor	12V DC	3-147-459
19mm	100mA	SPDT	none	IP40	area illumination	red	12V DC	3-147-460
19mm	3A	SPDT	none	IP40	area illumination	red	12V DC	3-147-461
19mm	100mA	SPDT	none	IP40	area illumination	green	12V DC	3-147-462
19mm	3A	SPDT	none	IP40	area illumination	green	12V DC	3-147-463
19mm	100mA	SPDT	none	IP40	area illumination	blue	12V DC	3-147-464
19mm	3A	SPDT	none	IP40	area illumination	blue	12V DC	3-147-465
19mm	100mA	SPDT	none	IP40	area illumination	yellow	12V DC	3-147-466
19mm	3A	SPDT	none	IP40	area illumination	yellow	12V DC	3-147-467
19mm	100mA	SPDT	none	IP40	area illumination	white	12V DC	3-147-468
19mm	3A	SPDT	none	IP40	area illumination	white	12V DC	3-147-469
19mm	100mA	SPDT	common cathode	IP40	area illumination	multicolor	12V DC	3-147-470
19mm	3A	SPDT	common cathode	IP40	area illumination	multicolor	12V DC	3-147-471
19mm	100mA	SPDT	none	IP40	point illumination	red	5V DC	3-147-472
19mm	3A	SPDT	none	IP40	point illumination	red	5V DC	3-147-473
19mm	100mA	SPDT	none	IP40	point illumination	green	5V DC	3-147-474
19mm	3A	SPDT	none	IP40	point illumination	green	5V DC	3-147-475
19mm	100mA	SPDT	none	IP40	point illumination	blue	5V DC	3-147-476
19mm	3A	SPDT	none	IP40	point illumination	blue	5V DC	3-147-477
19mm	100mA	SPDT	none	IP40	point illumination	yellow	5V DC	3-147-478
19mm	3A	SPDT	none	IP40	point illumination	yellow	5V DC	3-147-479
19mm	100mA	SPDT	none	IP40	point illumination	white	5V DC	3-147-480
19mm	3A	SPDT	none	IP40	point illumination	white	5V DC	3-147-481
19mm	100mA	SPDT	common cathode	IP40	point illumination	multicolor	5V DC	3-147-482
19mm	3A	SPDT	common cathode	IP40	point illumination	multicolor	5V DC	3-147-483
19mm	100mA	SPDT	none	IP40	area illumination	red	5V DC	3-147-484
19mm	3A	SPDT	none	IP40	area illumination	red	5V DC	3-147-485
19mm	100mA	SPDT	none	IP40	area illumination	green	5V DC	3-147-486
19mm	3A	SPDT	none	IP40	area illumination	green	5V DC	3-147-487
19mm	100mA	SPDT	none	IP40	area illumination	blue	5V DC	3-147-488
19mm	3A	SPDT	none	IP40	area illumination	blue	5V DC	3-147-489
19mm	100mA	SPDT	none	IP40	area illumination	yellow	5V DC	3-147-490
19mm	3A	SPDT	none	IP40	area illumination	yellow	5V DC	3-147-491
19mm	100mA	SPDT	none	IP40	area illumination	white	5V DC	3-147-492
19mm	3A	SPDT	none	IP40	area illumination	white	5V DC	3-147-493
19mm	100mA	SPDT	common cathode	IP40	area illumination	multicolor	5V DC	3-147-494
19mm	3A	SPDT	common cathode	IP40	area illumination	multicolor	5V DC	3-147-495
19mm	3A	SPDT	common cathode	IP40	ring illumination deadfront	multicolor	24V DC	3-149-271
19mm	100mA	SPDT	common cathode	IP40	ring illumination	multicolor	w/o resistors	3-150-328
19mm	100mA	SPDT	common cathode	IP40	point illumination	multicolor	w/o resistors	3-150-488
19mm	100mA	SPDT	none	IP40	ring illumination deadfront	white	24V DC	3-151-063
19mm	100mA	SPDT	common cathode	IP40	ring illumination	multicolor	w/o resistors	3-152-610
19mm	5A	SPDT	none	IP40	ring illumination	blue	24V DC	3-158-215
22mm	100mA	SPDT	none	IP40	none	none	none	3-147-014
22mm	3A	SPDT	none	IP40	none	none	none	3-147-015
22mm	100mA	SPDT	none	IP40	none	none	none	3-147-016
22mm	3A	SPDT	none	IP40	none	none	none	3-147-017

Diameter	Switching current	Electrical contact	Circuit type illumination	IP specification backside	Illumination	Illumination color	Supply Voltage LED	Order Number
22mm	100mA	SPDT	none	IP40	ring colored (non illumination)	red	none	3-147-018
22mm	3A	SPDT	none	IP40	ring colored (non illumination)	red	none	3-147-019
22mm	100mA	SPDT	none	IP40	ring colored (non illumination)	green	none	3-147-020
22mm	3A	SPDT	none	IP40	ring colored (non illumination)	green	none	3-147-021
22mm	100mA	SPDT	none	IP40	ring colored (non illumination)	blue	none	3-147-022
22mm	3A	SPDT	none	IP40	ring colored (non illumination)	blue	none	3-147-023
22mm	100mA	SPDT	none	IP40	ring colored (non illumination)	black	none	3-147-024
22mm	3A	SPDT	none	IP40	ring colored (non illumination)	black	none	3-147-025
22mm	100mA	SPDT	none	IP40	ring colored (non illumination)	grey	none	3-147-026
22mm	3A	SPDT	none	IP40	ring colored (non illumination)	grey	none	3-147-027
22mm	100mA	SPDT	none	IP40	ring colored (non illumination)	yellow	none	3-147-028
22mm	3A	SPDT	none	IP40	ring colored (non illumination)	yellow	none	3-147-030
22mm	100mA	SPDT	none	IP40	ring colored (non illumination)	white	none	3-147-031
22mm	3A	SPDT	none	IP40	ring colored (non illumination)	white	none	3-147-032
22mm	100mA	SPDT	none	IP40	ring colored (non illumination)	orange	none	3-147-033
22mm	3A	SPDT	none	IP40	ring colored (non illumination)	orange	none	3-147-034
22mm	100mA	SPDT	none	IP40	ring illumination	red	24V DC	3-147-035
22mm	3A	SPDT	none	IP40	ring illumination	red	24V DC	3-147-036
22mm	100mA	SPDT	none	IP40	ring illumination	green	24V DC	3-147-037
22mm	3A	SPDT	none	IP40	ring illumination	green	24V DC	3-147-038
22mm	100mA	SPDT	none	IP40	ring illumination	blue	24V DC	3-147-039
22mm	3A	SPDT	none	IP40	ring illumination	blue	24V DC	3-147-040
22mm	100mA	SPDT	none	IP40	ring illumination	yellow	24V DC	3-147-042
22mm	3A	SPDT	none	IP40	ring illumination	yellow	24V DC	3-147-043
22mm	100mA	SPDT	none	IP40	ring illumination	white	24V DC	3-147-044
22mm	3A	SPDT	none	IP40	ring illumination	white	24V DC	3-147-045
22mm	100mA	SPDT	common cathode	IP40	ring illumination	multicolor	24V DC	3-147-046
22mm	3A	SPDT	common cathode	IP40	ring illumination	multicolor	24V DC	3-147-047
22mm	100mA	SPDT	none	IP40	ring illumination	red	12V DC	3-147-048
22mm	3A	SPDT	none	IP40	ring illumination	red	12V DC	3-147-049
22mm	100mA	SPDT	none	IP40	ring illumination	green	12V DC	3-147-050
22mm	3A	SPDT	none	IP40	ring illumination	green	12V DC	3-147-051
22mm	100mA	SPDT	none	IP40	ring illumination	blue	12V DC	3-147-052
22mm	3A	SPDT	none	IP40	ring illumination	blue	12V DC	3-147-053
22mm	100mA	SPDT	none	IP40	ring illumination	yellow	12V DC	3-147-054
22mm	3A	SPDT	none	IP40	ring illumination	yellow	12V DC	3-147-055
22mm	100mA	SPDT	none	IP40	ring illumination	white	12V DC	3-147-056
22mm	3A	SPDT	none	IP40	ring illumination	white	12V DC	3-147-057
22mm	100mA	SPDT	common cathode	IP40	ring illumination	multicolor	12V DC	3-147-058
22mm	3A	SPDT	common cathode	IP40	ring illumination	multicolor	12V DC	3-147-059
22mm	100mA	SPDT	none	IP40	ring illumination	red	5V DC	3-147-060

MSM II MO SPDT solder Pins

Diameter	Switching current	Electrical contact	Circuit type illumination	IP specification backside	Illumination	Illumination color	Supply Voltage LED	Order Number
22mm	3A	SPDT	none	IP40	ring illumination	red	5V DC	3-147-061
22mm	100mA	SPDT	none	IP40	ring illumination	green	5V DC	3-147-062
22mm	3A	SPDT	none	IP40	ring illumination	green	5V DC	3-147-063
22mm	100mA	SPDT	none	IP40	ring illumination	blue	5V DC	3-147-064
22mm	3A	SPDT	none	IP40	ring illumination	blue	5V DC	3-147-065
22mm	100mA	SPDT	none	IP40	ring illumination	yellow	5V DC	3-147-066
22mm	3A	SPDT	none	IP40	ring illumination	yellow	5V DC	3-147-068
22mm	100mA	SPDT	none	IP40	ring illumination	white	5V DC	3-147-069
22mm	3A	SPDT	none	IP40	ring illumination	white	5V DC	3-147-070
22mm	100mA	SPDT	common cathode	IP40	ring illumination	multicolor	5V DC	3-147-071
22mm	3A	SPDT	common cathode	IP40	ring illumination	multicolor	5V DC	3-147-072
22mm	100mA	SPDT	none	IP40	point illumination	red	24V DC	3-147-496
22mm	3A	SPDT	none	IP40	point illumination	red	24V DC	3-147-497
22mm	100mA	SPDT	none	IP40	point illumination	green	24V DC	3-147-498
22mm	3A	SPDT	none	IP40	point illumination	green	24V DC	3-147-499
22mm	100mA	SPDT	none	IP40	point illumination	blue	24V DC	3-147-500
22mm	3A	SPDT	none	IP40	point illumination	blue	24V DC	3-147-501
22mm	100mA	SPDT	none	IP40	point illumination	yellow	24V DC	3-147-502
22mm	3A	SPDT	none	IP40	point illumination	yellow	24V DC	3-147-503
22mm	100mA	SPDT	none	IP40	point illumination	white	24V DC	3-147-504
22mm	3A	SPDT	none	IP40	point illumination	white	24V DC	3-147-505
22mm	100mA	SPDT	common cathode	IP40	point illumination	multicolor	24V DC	3-147-506
22mm	3A	SPDT	common cathode	IP40	point illumination	multicolor	24V DC	3-147-507
22mm	100mA	SPDT	none	IP40	area illumination	red	24V DC	3-147-508
22mm	3A	SPDT	none	IP40	area illumination	red	24V DC	3-147-509
22mm	100mA	SPDT	none	IP40	area illumination	green	24V DC	3-147-510
22mm	3A	SPDT	none	IP40	area illumination	green	24V DC	3-147-511
22mm	100mA	SPDT	none	IP40	area illumination	blue	24V DC	3-147-512
22mm	3A	SPDT	none	IP40	area illumination	blue	24V DC	3-147-513
22mm	100mA	SPDT	none	IP40	area illumination	yellow	24V DC	3-147-514
22mm	3A	SPDT	none	IP40	area illumination	yellow	24V DC	3-147-515
22mm	100mA	SPDT	none	IP40	area illumination	white	24V DC	3-147-516
22mm	3A	SPDT	none	IP40	area illumination	white	24V DC	3-147-517
22mm	100mA	SPDT	common cathode	IP40	area illumination	multicolor	24V DC	3-147-518
22mm	3A	SPDT	common cathode	IP40	area illumination	multicolor	24V DC	3-147-519
22mm	100mA	SPDT	none	IP40	point illumination	red	12V DC	3-147-520
22mm	3A	SPDT	none	IP40	point illumination	red	12V DC	3-147-521
22mm	100mA	SPDT	none	IP40	point illumination	green	12V DC	3-147-522
22mm	3A	SPDT	none	IP40	point illumination	green	12V DC	3-147-523
22mm	100mA	SPDT	none	IP40	point illumination	blue	12V DC	3-147-524
22mm	3A	SPDT	none	IP40	point illumination	blue	12V DC	3-147-525
22mm	100mA	SPDT	none	IP40	point illumination	yellow	12V DC	3-147-526
22mm	3A	SPDT	none	IP40	point illumination	yellow	12V DC	3-147-527
22mm	100mA	SPDT	none	IP40	point illumination	white	12V DC	3-147-528
22mm	3A	SPDT	none	IP40	point illumination	white	12V DC	3-147-529
22mm	100mA	SPDT	common cathode	IP40	point illumination	multicolor	12V DC	3-147-530
22mm	3A	SPDT	common cathode	IP40	point illumination	multicolor	12V DC	3-147-531

Diameter	Switching current	Electrical contact	Circuit type illumination	IP specification backside	Illumination	Illumination color	Supply Voltage LED	Order Number
22mm	100mA	SPDT	none	IP40	area illumination	red	12V DC	3-147-532
22mm	3A	SPDT	none	IP40	area illumination	red	12V DC	3-147-533
22mm	100mA	SPDT	none	IP40	area illumination	green	12V DC	3-147-534
22mm	3A	SPDT	none	IP40	area illumination	green	12V DC	3-147-535
22mm	100mA	SPDT	none	IP40	area illumination	blue	12V DC	3-147-536
22mm	3A	SPDT	none	IP40	area illumination	blue	12V DC	3-147-537
22mm	100mA	SPDT	none	IP40	area illumination	yellow	12V DC	3-147-539
22mm	3A	SPDT	none	IP40	area illumination	yellow	12V DC	3-147-540
22mm	100mA	SPDT	none	IP40	area illumination	white	12V DC	3-147-541
22mm	3A	SPDT	none	IP40	area illumination	white	12V DC	3-147-542
22mm	100mA	SPDT	common cathode	IP40	area illumination	multicolor	12V DC	3-147-543
22mm	3A	SPDT	common cathode	IP40	area illumination	multicolor	12V DC	3-147-544
22mm	100mA	SPDT	none	IP40	point illumination	red	5V DC	3-147-545
22mm	3A	SPDT	none	IP40	point illumination	red	5V DC	3-147-546
22mm	100mA	SPDT	none	IP40	point illumination	green	5V DC	3-147-547
22mm	3A	SPDT	none	IP40	point illumination	green	5V DC	3-147-548
22mm	100mA	SPDT	none	IP40	point illumination	blue	5V DC	3-147-549
22mm	3A	SPDT	none	IP40	point illumination	blue	5V DC	3-147-550
22mm	100mA	SPDT	none	IP40	point illumination	yellow	5V DC	3-147-551
22mm	3A	SPDT	none	IP40	point illumination	yellow	5V DC	3-147-552
22mm	100mA	SPDT	none	IP40	point illumination	white	5V DC	3-147-553
22mm	3A	SPDT	none	IP40	point illumination	white	5V DC	3-147-554
22mm	100mA	SPDT	common cathode	IP40	point illumination	multicolor	5V DC	3-147-555
22mm	3A	SPDT	common cathode	IP40	point illumination	multicolor	5V DC	3-147-556
22mm	100mA	SPDT	none	IP40	area illumination	red	5V DC	3-147-557
22mm	3A	SPDT	none	IP40	area illumination	red	5V DC	3-147-558
22mm	100mA	SPDT	none	IP40	area illumination	green	5V DC	3-147-559
22mm	3A	SPDT	none	IP40	area illumination	green	5V DC	3-147-560
22mm	100mA	SPDT	none	IP40	area illumination	blue	5V DC	3-147-561
22mm	3A	SPDT	none	IP40	area illumination	blue	5V DC	3-147-562
22mm	100mA	SPDT	none	IP40	area illumination	yellow	5V DC	3-147-563
22mm	3A	SPDT	none	IP40	area illumination	yellow	5V DC	3-147-564
22mm	100mA	SPDT	none	IP40	area illumination	white	5V DC	3-147-565
22mm	3A	SPDT	none	IP40	area illumination	white	5V DC	3-147-566
22mm	100mA	SPDT	common cathode	IP40	area illumination	multicolor	5V DC	3-147-567
22mm	3A	SPDT	common cathode	IP40	area illumination	multicolor	5V DC	3-147-568
22mm	3A	SPDT	none	IP40	ring illumination	green	24V DC	3-155-624
22mm	100mA	SPDT	none	IP40	none	none	none	3-159-866
30mm	100mA	SPDT	none	IP40	none	none	none	3-147-074
30mm	3A	SPDT	none	IP40	none	none	none	3-147-075
30mm	100mA	SPDT	none	IP40	none	none	none	3-147-076
30mm	3A	SPDT	none	IP40	none	none	none	3-147-077
30mm	100mA	SPDT	none	IP40	ring colored (non illumination)	red	none	3-147-078
30mm	3A	SPDT	none	IP40	ring colored (non illumination)	red	none	3-147-079
30mm	100mA	SPDT	none	IP40	ring colored (non illumination)	green	none	3-147-080

MSM II MO SPDT solder Pins

Diameter	Switching current	Electrical contact	Circuit type illumination	IP specification backside	Illumination	Illumination color	Supply Voltage LED	Order Number
30mm	3A	SPDT	none	IP40	ring colored (non illumination)	green	none	3-147-081
30mm	100mA	SPDT	none	IP40	ring colored (non illumination)	blue	none	3-147-082
30mm	3A	SPDT	none	IP40	ring colored (non illumination)	blue	none	3-147-083
30mm	100mA	SPDT	none	IP40	ring colored (non illumination)	black	none	3-147-084
30mm	3A	SPDT	none	IP40	ring colored (non illumination)	black	none	3-147-085
30mm	100mA	SPDT	none	IP40	ring colored (non illumination)	grey	none	3-147-086
30mm	3A	SPDT	none	IP40	ring colored (non illumination)	grey	none	3-147-087
30mm	100mA	SPDT	none	IP40	ring colored (non illumination)	yellow	none	3-147-088
30mm	3A	SPDT	none	IP40	ring colored (non illumination)	yellow	none	3-147-089
30mm	100mA	SPDT	none	IP40	ring colored (non illumination)	white	none	3-147-090
30mm	3A	SPDT	none	IP40	ring colored (non illumination)	white	none	3-147-091
30mm	100mA	SPDT	none	IP40	ring colored (non illumination)	orange	none	3-147-092
30mm	3A	SPDT	none	IP40	ring colored (non illumination)	orange	none	3-147-093
30mm	100mA	SPDT	none	IP40	ring illumination	red	24V DC	3-147-094
30mm	3A	SPDT	none	IP40	ring illumination	red	24V DC	3-147-095
30mm	100mA	SPDT	none	IP40	ring illumination	green	24V DC	3-147-096
30mm	3A	SPDT	none	IP40	ring illumination	green	24V DC	3-147-097
30mm	100mA	SPDT	none	IP40	ring illumination	blue	24V DC	3-147-098
30mm	3A	SPDT	none	IP40	ring illumination	blue	24V DC	3-147-099
30mm	100mA	SPDT	none	IP40	ring illumination	yellow	24V DC	3-147-100
30mm	3A	SPDT	none	IP40	ring illumination	yellow	24V DC	3-147-101
30mm	100mA	SPDT	none	IP40	ring illumination	white	24V DC	3-147-102
30mm	3A	SPDT	none	IP40	ring illumination	white	24V DC	3-147-103
30mm	100mA	SPDT	common cathode	IP40	ring illumination	multicolor	24V DC	3-147-104
30mm	3A	SPDT	common cathode	IP40	ring illumination	multicolor	24V DC	3-147-105
30mm	100mA	SPDT	none	IP40	ring illumination	red	12V DC	3-147-106
30mm	3A	SPDT	none	IP40	ring illumination	red	12V DC	3-147-107
30mm	100mA	SPDT	none	IP40	ring illumination	green	12V DC	3-147-108
30mm	3A	SPDT	none	IP40	ring illumination	green	12V DC	3-147-109
30mm	100mA	SPDT	none	IP40	ring illumination	blue	12V DC	3-147-110
30mm	3A	SPDT	none	IP40	ring illumination	blue	12V DC	3-147-111
30mm	100mA	SPDT	none	IP40	ring illumination	yellow	12V DC	3-147-112
30mm	3A	SPDT	none	IP40	ring illumination	yellow	12V DC	3-147-113
30mm	100mA	SPDT	none	IP40	ring illumination	white	12V DC	3-147-114
30mm	3A	SPDT	none	IP40	ring illumination	white	12V DC	3-147-115
30mm	100mA	SPDT	common cathode	IP40	ring illumination	multicolor	12V DC	3-147-116
30mm	3A	SPDT	common cathode	IP40	ring illumination	multicolor	12V DC	3-147-117
30mm	100mA	SPDT	none	IP40	ring illumination	red	5V DC	3-147-118
30mm	3A	SPDT	none	IP40	ring illumination	red	5V DC	3-147-119
30mm	100mA	SPDT	none	IP40	ring illumination	green	5V DC	3-147-120
30mm	3A	SPDT	none	IP40	ring illumination	green	5V DC	3-147-121
30mm	100mA	SPDT	none	IP40	ring illumination	blue	5V DC	3-147-122

MSM II MO SPDT solder Pins

Diameter	Switching current	Electrical contact	Circuit type illumination	IP specification backside	Illumination	Illumination color	Supply Voltage LED	Order Number
30mm	3A	SPDT	none	IP40	ring illumination	blue	5V DC	3-147-123
30mm	100mA	SPDT	none	IP40	ring illumination	yellow	5V DC	3-147-124
30mm	3A	SPDT	none	IP40	ring illumination	yellow	5V DC	3-147-125
30mm	100mA	SPDT	none	IP40	ring illumination	white	5V DC	3-147-126
30mm	3A	SPDT	none	IP40	ring illumination	white	5V DC	3-147-127
30mm	100mA	SPDT	common cathode	IP40	ring illumination	multicolor	5V DC	3-147-128
30mm	3A	SPDT	common cathode	IP40	ring illumination	multicolor	5V DC	3-147-129
30mm	100mA	SPDT	none	IP40	point illumination	red	24V DC	3-147-569
30mm	3A	SPDT	none	IP40	point illumination	red	24V DC	3-147-570
30mm	100mA	SPDT	none	IP40	point illumination	green	24V DC	3-147-571
30mm	3A	SPDT	none	IP40	point illumination	green	24V DC	3-147-572
30mm	100mA	SPDT	none	IP40	point illumination	blue	24V DC	3-147-573
30mm	3A	SPDT	none	IP40	point illumination	blue	24V DC	3-147-574
30mm	100mA	SPDT	none	IP40	point illumination	yellow	24V DC	3-147-575
30mm	3A	SPDT	none	IP40	point illumination	yellow	24V DC	3-147-576
30mm	100mA	SPDT	none	IP40	point illumination	white	24V DC	3-147-577
30mm	3A	SPDT	none	IP40	point illumination	white	24V DC	3-147-578
30mm	100mA	SPDT	common cathode	IP40	point illumination	multicolor	24V DC	3-147-579
30mm	3A	SPDT	common cathode	IP40	point illumination	multicolor	24V DC	3-147-580
30mm	100mA	SPDT	none	IP40	point illumination	red	12V DC	3-147-581
30mm	3A	SPDT	none	IP40	point illumination	red	12V DC	3-147-582
30mm	100mA	SPDT	none	IP40	point illumination	green	12V DC	3-147-583
30mm	3A	SPDT	none	IP40	point illumination	green	12V DC	3-147-584
30mm	100mA	SPDT	none	IP40	point illumination	blue	12V DC	3-147-585
30mm	3A	SPDT	none	IP40	point illumination	blue	12V DC	3-147-586
30mm	100mA	SPDT	none	IP40	point illumination	yellow	12V DC	3-147-587
30mm	3A	SPDT	none	IP40	point illumination	yellow	12V DC	3-147-588
30mm	100mA	SPDT	none	IP40	point illumination	white	12V DC	3-147-589
30mm	3A	SPDT	none	IP40	point illumination	white	12V DC	3-147-590
30mm	100mA	SPDT	common cathode	IP40	point illumination	multicolor	12V DC	3-147-591
30mm	3A	SPDT	common cathode	IP40	point illumination	multicolor	12V DC	3-147-592
30mm	100mA	SPDT	none	IP40	point illumination	red	5V DC	3-147-593
30mm	3A	SPDT	none	IP40	point illumination	red	5V DC	3-147-594
30mm	100mA	SPDT	none	IP40	point illumination	green	5V DC	3-147-595
30mm	3A	SPDT	none	IP40	point illumination	green	5V DC	3-147-596
30mm	100mA	SPDT	none	IP40	point illumination	blue	5V DC	3-147-597
30mm	3A	SPDT	none	IP40	point illumination	blue	5V DC	3-147-598
30mm	100mA	SPDT	none	IP40	point illumination	yellow	5V DC	3-147-599
30mm	3A	SPDT	none	IP40	point illumination	yellow	5V DC	3-147-600
30mm	100mA	SPDT	none	IP40	point illumination	white	5V DC	3-147-601
30mm	3A	SPDT	none	IP40	point illumination	white	5V DC	3-147-602
30mm	100mA	SPDT	common cathode	IP40	point illumination	multicolor	5V DC	3-147-603
30mm	3A	SPDT	common cathode	IP40	point illumination	multicolor	5V DC	3-147-604

Availability for all products can be searched real-time: https://www.schurter.com/en/info-center/support-tools/stock-check-distributors

1) Microswitch SPDT / Indicator with quick connect terminals

2) Subminiature Switch SPDT / Indicator with solder terminals

Diameter	Switching current	Electrical contact	Circuit type illumination	IP specification backside	Illumination	Illumination color	Supply Voltage LED	Order Number

3) Subminiature Switch DPDT with solder terminals

Packaging unit 10 pcs. In box or packed in air cushion bags

The nut with gasket and micro switch are enclosed in the box.

12.03.2026

The specifications, descriptions and illustrations indicated in this document are based on current information. All content is subject to modifications and amendments. Information furnished is believed to be accurate and reliable. However, users should independently evaluate the suitability and test each product selected for their own applications.